Assignment 1, 2

Hardware and its components

1 What is input device?

An **input device** is a hardware component of a computer that is used to **enter data and instructions into the computer system**. It allows the user to communicate with the computer.

In simple words, an input device sends information **from the user to the computer**.

Examples of Input Devices

- **Keyboard – used to type text, numbers, and commands.**
- **Computer Mouse – used to point, click, and select items on the screen.**
- **Microphone – used to input voice or sound.**
- **Webcam – used to capture images or videos.**
- **Scanner – used to convert paper documents into digital form.**

2 What are output device?

An **output device** is a hardware component of a computer that **receives data from the computer and presents the result to the user**.

In simple words, an output device shows the **processed information from the computer to the user**.

Examples of Output Devices

- **Computer Monitor** – displays text, images, and videos.
- **Printer** – prints documents and images on paper.
- **Computer Speakers** – produce sound from the computer.
- **Headphones** – allow users to hear audio privately.
- **Projector** – displays the computer screen on a large surface

3 What is CPU?

The **CPU (Central Processing Unit)** is the **main part of a computer that processes data and controls all operations**. It is often called the **"brain of the computer"** because it performs calculations and manages all instructions given to the computer.

Main Functions of CPU

1. **Processing data** – performs calculations and logical operations.

2. **Controlling operations** – controls the working of all parts of the computer.

3. **Executing instructions** – follows instructions from programs.

Parts of the CPU

- **Arithmetic Logic Unit (ALU)** – performs mathematical and logical operations.

- **Control Unit (CU)** – controls and directs the operations of the computer.

- **Registers** – small memory units used for fast processing.

4 What are the types of CPU?

The **CPU (Central Processing Unit)** can be classified into different types based on the **number of cores** it has.

Types of CPU

1. **Single-Core CPU**

    - Has only **one core**.
    - Can process **one task at a time**.
    - Used in older computers.

2. **Dual-Core CPU**

    - Has **two cores**.

- Can handle **two tasks simultaneously**.
- Faster than single-core processors.

3. **Quad-Core CPU**

   - Has **four cores**.
   - Can perform **multiple tasks efficiently**.
   - Common in modern computers and laptops.

4. **Octa-Core CPU**

   - Has **eight cores**.
   - Provides **high performance** for gaming and heavy applications.

5 What do we need to keep the CPU Healthy?

Central Processing Unit (CPU) healthy and working properly, we should take care of the computer system and prevent overheating or damage.

Ways to Keep the CPU Healthy

1. **Keep the computer clean**
   Remove dust regularly so it does not block airflow inside the CPU cabinet.

2. **Use proper cooling**
   Make sure the **CPU fan** or cooling system is working properly to prevent overheating.

3. **Keep the computer in a cool place**
   Avoid placing the computer in very hot or closed areas.

4. **Use a UPS or voltage stabilizer**
   Protect the CPU from sudden power cuts or voltage fluctuations.

5. **Do not overload the computer**
   Avoid running too many heavy programs at the same time.

6. **Install antivirus software**
   Protect the system from viruses that can slow down or damage the computer.

6 Do a practical to remove processor and apply thermal paste in it and install it again.

Practical: Remove CPU, Apply Thermal Paste, and Reinstall

Safety first: Make sure the computer is turned off and unplugged. Ground yourself to prevent static damage.

Steps:

Open the CPU case – remove the side panel of the computer case.

Locate the CPU and cooler/fan – usually under a heat sink.

Remove the cooler – unscrew or unclip carefully.

Release the CPU – unlock the CPU socket lever and lift the CPU gently.

Clean old thermal paste – use isopropyl alcohol and a soft cloth.

Apply new thermal paste – a small pea-sized dot in the center of the CPU.

Reinstall the CPU – place it carefully in the socket, align the notches.

Reattach the cooler – secure fan/heatsink on top.

Close the case and power on – check if the computer runs normally**.**

7 What is memory?

Memory in a computer is a hardware component that **stores data and instructions** temporarily or permanently so that the CPU can access and use them. It acts like the computer's short-term and long-term "brain storage."

Memory is where the computer **keeps information** it needs to work with right now or later

Types of Computer Memory

1. **Primary Memory (RAM and ROM)**
    - **RAM (Random Access Memory)** – Temporary memory that stores data and programs **currently in use**. Data is lost when the computer is turned off.
    - **ROM (Read-Only Memory)** – Permanent memory that stores **essential instructions** like boot-up programs. Data is **not lost** when the computer is off.
    -
2. **Secondary Memory (Storage)**

- Hard Drives (HDD), Solid-State Drives (SSD), USB drives – used for **long-term storage** of files and programs.

The document is loaded from the **secondary memory (hard drive)** into **primary memory (RAM)** so the CPU can work on it quickly.

Functions of Memory

Stores programs and data for the CPU.

Helps the computer run multiple tasks efficiently.

Temporarily holds data while calculations are being performed.

8 What are the types of memory?

Types of Memory in a Computer

Memory can be classified based on **function, volatility, and storage duration**:

Primary Memory (Main Memory)

- **RAM (Random Access Memory):** Temporary storage for programs currently running; **volatile**.
- **ROM (Read-Only Memory):** Stores essential instructions like boot programs; **non-volatile**.
- **Cache Memory:** Small, fast memory near the CPU for frequently used data; **volatile**.

- **Registers:** Tiny storage locations inside the CPU for immediate operations; **volatile**.

2 **Secondary Memory (Auxiliary/External Memory)**

- Used for **long-term storage** of programs and files.
- Examples: HDD, SSD, CD/DVD, USB flash drives.

3 **Tertiary/Offline Memory**

- Used for **backup or archival storage**.
- Examples: Tape drives, external backup drives.

Memory Type	Volatile / Non-volatile	Purpose
RAM	Volatile	Temporary storage for running programs
ROM	Non-volatile	Permanent instructions for booting
Cache	Volatile	Fast storage for CPU operations

Registers	Volatile	Immediate CPU operations
HDD/SSD	Non-volatile	Long-term storage of files/programs
Optical/USB	Non-volatile	Portable or backup storage

9 What is bios?

BIOS stands for **Basic Input/Output System**. It is a **firmware program** stored on a small memory chip (ROM) on the motherboard that **helps the computer start and manage hardware** when powered on.

- **In simple words:** BIOS is like the computer's **starter program**. It wakes up the hardware, checks everything, and then loads the operating system.

- BIOS is stored in **ROM** (non-volatile memory), so it doesn't get erased when the computer is off.
- It acts as a **bridge between the computer hardware and the operating system**.
- You can access BIOS by pressing keys like **DEL, F2, or ESC** during startup.

Functions of BIOS

1. **Power-On Self-Test (POST):** Checks the CPU, RAM, storage drives, and other hardware when the computer is

turned on.

2. **Bootstrap Loader:** Finds and loads the operating system from storage into memory.

3. **Hardware Initialization:** Configures and manages hardware like keyboard, display, storage devices, and CPU settings.

4. **CMOS Setup Utility:** Allows users to change system settings, such as date, time, boot order, and hardware configurations.

Types of BIOS

1. **Legacy BIOS:** Traditional BIOS with basic hardware control and limited features.

2. **UEFI (Unified Extensible Firmware Interface):** Modern replacement for legacy BIOS with advanced features like faster booting, support for large drives, and graphical interface.

10 Describe working process of BIOS.?

Working Process of BIOS

BIOS (Basic Input/Output System) is responsible for **starting the computer and preparing it to run the operating system**. The process is called **booting**, and it follows these main steps:

1 Power-On and Initialization

- When you **turn on the computer**, the power supply sends electricity to the motherboard.
- BIOS, stored in **ROM (Read-Only Memory)**, **activates automatically**.
- BIOS initializes and checks basic hardware components like CPU, RAM, keyboard, and storage devices.

2 POST (Power-On Self-Test)

- BIOS performs **POST**, which tests all essential hardware:
  - CPU (processor)
  - RAM (memory)
  - Keyboard and input devices
  - Display and graphics card
  - Storage drives (HDD, SSD)
- If any hardware fails, BIOS alerts the user with **beep codes or error messages**.

3 BIOS Setup / CMOS Check

- BIOS reads **system configuration settings** stored in **CMOS memory**.

- CMOS contains information like:
    - Date and time
    - Boot sequence (which device to load the OS from first)
    - Hardware configuration (enabled/disabled devices)

4 Bootstrap Loader

- BIOS looks for the **bootable device** (HDD, SSD, CD/DVD, USB).
- It locates the **Master Boot Record (MBR)** or **GUID Partition Table (GPT)**.
- BIOS loads the first instructions of the **operating system** into RAM.

5 Handing Over Control

- Once the OS is loaded into memory, BIOS **hands over control** to the operating system.
- From this point, the OS manages all hardware and software operations.

6 Optional: UEFI Modern BIOS

- In modern systems, **UEFI BIOS** may provide:

- Graphical interface
- Mouse support
- Network boot options
- Secure Boot to prevent unauthorized OS

Step-by-Step

1. Power on → BIOS activates
2. POST → hardware testing
3. CMOS check → read configuration settings
4. Bootstrap loader → find OS boot device
5. Load OS into RAM
6. Hand over control → OS starts

11What is CMOS?

CMOS stands for **Complementary Metal-Oxide Semiconductor**. It is a small amount of **special memory on the motherboard** that stores **BIOS settings and system configuration**

CMOS is the memory that stores important computer settings, such as date, time, and hardware configuration.

CMOS Battery

- CMOS memory is powered by a small CMOS battery on the motherboard.

- This battery keeps the BIOS settings saved even when the computer is turned off.

Functions of CMOS

1. Stores BIOS settings – such as boot order and hardware configuration.

2. Keeps system date and time correct.

3. Stores system hardware information like hard drives, RAM, and CPU settings.

4. Helps the computer start correctly during the boot process.

Examples of CMOS Stored Information

- System **date and time**

- **Boot sequence** (which device starts first)

- **CPU and RAM configuration**

- **Enabled or disabled hardware devices**

12 What is a Motherboard?

A **motherboard** is the **main circuit board of a computer** that connects and allows communication between all the important components of the system.
The motherboard is like the **backbone of the computer** where all parts such as the CPU, memory, and storage are connected.

Main Functions of a Motherboard

1. **Connects hardware components** – such as CPU, RAM, storage drives, and expansion cards.

2. **Allows communication** between all computer parts.

3. **Provides power distribution** from the power supply to components.

4. **Holds BIOS/UEFI firmware** that starts the computer during booting.

Main Parts on a Motherboard

- **CPU Socket** – place where the processor is installed.

- **RAM Slots** – used to install memory modules.

- **Chipset** – controls communication between CPU and other components.

- **Expansion Slots** – for graphics cards, network cards, etc.

- **Storage Connectors** – SATA or M.2 slots for HDDs and SSDs.
- **CMOS Battery** – keeps BIOS settings and system clock.
- **Power Connectors** – receive power from the power supply.

Importance of the Motherboard

- It **connects all components together**.
- It ensures **smooth communication between hardware**.
- Without a motherboard, a computer **cannot function**.

Example:
When you install **CPU, RAM, hard drive, and graphics card**, they all plug into the **motherboard**, which allows them to work together

13 Describe types of motherboard.?

Types of Motherboard

Motherboards are classified based on their **size, design, and features**. Different types are used in different computers.

1 AT Motherboard (Advanced Technology)

- One of the **oldest motherboard types**.
- Large in size and difficult to install.

- Used in **early desktop computers**.
- Now mostly **obsolete**.

2 ATX Motherboard (Advanced Technology Extended)

- **Most common motherboard** used in modern desktop computers.
- Provides better **power management and expansion slots**.
- Supports multiple RAM slots and expansion cards.

3 Micro-ATX Motherboard

- **Smaller version of ATX** motherboard.
- Has fewer expansion slots.
- Used in **small or budget desktop computers**.

4 Mini-ITX Motherboard

- **Very small motherboard** designed for compact computers.
- Uses less power and produces less heat.
- Common in **small PCs and home theater systems**.

5 BTX Motherboard (Balanced Technology Extended)

- Designed to improve **cooling and airflow**.
- Not widely used today and mostly discontinued.

14 What is system bus?

The system bus is like a **road or pathway** that carries **data, instructions, and signals** between the **CPU, memory (RAM), and other components**.

The **system bus connects the CPU, RAM, and other hardware components**, allowing them to communicate and work together.

Functions of System Bus

1. **Transfers data** between the CPU and memory.
2. **Sends control signals** to manage operations.
3. **Moves addresses** to locate data in memory or devices.

Types of System Bus

1 Data Bus

- Transfers **actual data** between CPU, memory, and devices.
- It is **bidirectional** (data can move both ways).

2 Address Bus

- Carries the **memory address** where data is stored.
- It is **unidirectional** (from CPU to memory).

3 Control Bus

- Carries **control signals** that manage operations of the computer.
- Examples: read, write, interrupt signals.

15 What is chipset and types of chipset?

A chipset works like a **traffic controller** on the motherboard that manages how data flows between different parts of the computer.

Functions of Chipset

1. Controls communication between **CPU and RAM**.
2. Manages **data transfer** between CPU and storage devices (HDD/SSD).
3. Handles **input and output devices** such as keyboard, mouse, and USB ports.
4. Supports **expansion slots** like graphics cards.

Types of Chipset

1 Northbridge Chipset

- Connects the **CPU directly to high-speed components**.
- Handles communication with:
  - **RAM (Memory)**
  - **Graphics card (GPU)**
- Provides **high-speed data transfer**.

2 Southbridge Chipset

- Handles **slower devices and input/output functions**.
- Manages components such as:
  - **Hard drives and SSDs**
  - **USB ports**
  - **Audio and network devices**
  - **PCI slots**

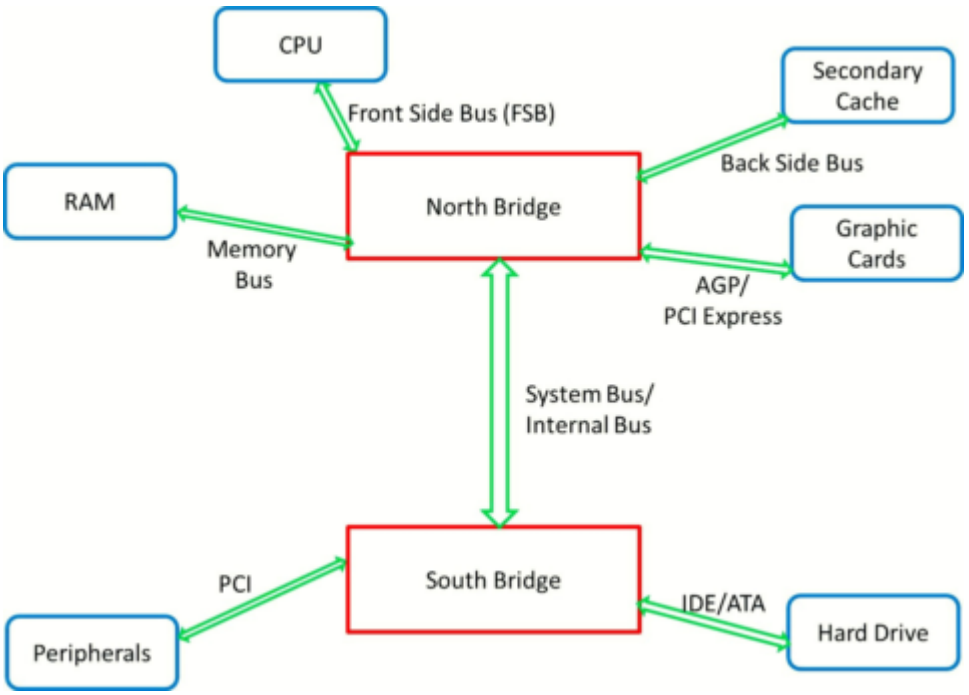

16 Describe how does the Northbridge chipset work what is SMPS? And its purpose DO a practical to install SMPS.

The **Northbridge chipset** is a part of the motherboard chipset that **handles high-speed communication between the CPU and important components**.

Working of Northbridge

1. The **CPU sends data requests** to the Northbridge chipset.

2. Northbridge manages communication with **high-speed components** such as:

- **RAM (main memory)**
- **Graphics card (GPU)**

3. It transfers data between the **CPU and RAM** for fast processing.
4. It also communicates with the **Southbridge chipset**, which manages slower devices like USB, hard drives, and audio.

Main Functions

- Connects **CPU and RAM**.
- Connects **CPU and graphics card**.
- Ensures **fast data transfer** between these components.

What is SMPS?

SMPS stands for **Switched Mode Power Supply**.

It is a **power supply unit inside the computer** that converts **AC power from the wall outlet into low-voltage DC power** required by computer components.
SMPS supplies the **correct electrical power** to all parts of the computer.

Purpose of SMPS

1. Converts **AC electricity to DC power**.

2. Supplies power to:
    - Motherboard
    - CPU
    - Hard drives / SSD
    - Graphics card
    - Cooling fans
3. Protects the system from **power fluctuations**.
4. Distributes power to different components through connectors.

Practical: Install SMPS in a Computer

To install an **SMPS (Power Supply Unit)** in a desktop computer.

Materials Required

- SMPS unit
- Screwdriver 🪛
- Desktop computer cabinet

Procedure

Step 1: Turn Off Power

1. Shut down the computer.
2. Disconnect the power cable and all external cables.

Step 2: Open the Cabinet

1. Remove screws from the side panel of the cabinet.
2. Slide the panel to open the computer case.

Step 3: Place the SMPS

1. Locate the **SMPS mounting area** (usually at the top or bottom rear of the cabinet).
2. Insert the SMPS into the mounting slot.

Step 4: Fix the SMPS

1. Align the screw holes of the SMPS with the cabinet holes.
2. Use screws to secure the SMPS firmly.

Step 5: Connect Power Cables

Connect the SMPS cables to the following components:

- **24-pin connector → Motherboard**
- **4/8-pin connector → CPU power**

- **SATA power cable → HDD/SSD**
- **PCI-E connector → Graphics card (if required)**
- **Molex connectors → Fans or older drives**

Step 6: Close the Cabinet

1. Replace the side panel.
2. Tighten the screws.

Step 7: Test the System

1. Connect the power cable.
2. Turn on the computer.
3. Check if the **fans spin and system boots properly**.

The **SMPS was successfully installed and connected to the computer system**, providing power to all components.

17How to check smps?

SMPS is working properly by following a simple practical method.

Method 1: Paper Clip Test (Basic Test)

Materials Required

- Paper clip or small wire

- SMPS unit
- Power cable

Steps

1. **Turn off the computer** and unplug the power cable.
2. Disconnect the **24-pin power connector** from the motherboard.
3. Take a **paper clip** and bend it into a U-shape.
4. Insert one end into the **green wire pin (PS_ON)** and the other end into **any black wire pin (ground)** on the 24-pin connector.
5. Plug the SMPS power cable into the wall socket.
6. Turn on the power supply.

Result

- If the **SMPS fan starts spinning**, the SMPS is working.
- If the **fan does not spin**, the SMPS may be faulty.

Method 2: Using a Multimeter

Steps

1. Turn on the SMPS.

2. Set the **multimeter to DC voltage mode**.

3. Check the voltage on the connectors:

Wire Color	Voltage
Yellow	+12V
Red	+5V
Orange	+3.3V
Black	Ground

Result

- If the voltages match the expected values, the SMPS is working properly.
- Incorrect voltage means the SMPS may be damaged.

Method 3: Check Inside the Computer

1. Turn on the computer.

2. Observe if:
    - The **SMPS fan spins**
    - The **motherboard lights turn on**
    - The **system boots normally**

If the computer does not start, the SMPS may be defective.

- Always be careful when working with electrical components.
- Never touch exposed wires while power is on.
- Turn off the power before connecting or disconnecting cables.

18 List out the types of storage devices.?

Storage devices are hardware components used to **store data and information** in a computer either temporarily or permanently.

1 Magnetic Storage Devices

These devices store data using **magnetic fields**.

Examples:

- Hard Disk Drive (HDD)
- Floppy Disk
- Magnetic Tape

Features:

- Large storage capacity
- Used for long-term data storage

2 Optical Storage Devices

These devices use **laser light** to read and write data.

Examples:

- CD (Compact Disc)
- DVD (Digital Versatile Disc)
- Blu-ray Disc

Features:

- Portable
- Used for storing music, videos, and software

3 Solid-State Storage Devices

These devices store data using **flash memory** and have no moving parts.

Examples:

- Solid-State Drive (SSD)
- USB Flash Drive (Pen Drive)
- Memory Card (SD Card)

Features:

- Faster data access
- Durable and lightweight

4 Cloud Storage

Data is stored on **remote servers through the internet**.

Examples:

- Google Drive
- Dropbox
- OneDrive

Features:

- Accessible from anywhere
- Requires internet connection

19 Describe the working process of storage devices?

Storage devices are used to **store, retrieve, and manage data** in a computer system. They allow users to save information so it can be used later.

Working Process

1 **Data Input**

- When a user saves a file (document, image, video), the computer sends the data to the storage device.

2 **Data Conversion**

- The storage device converts the data into a **suitable format** for storage:
- Magnetic devices store data using **magnetic signals**.

- Optical devices use **laser light** to write data.
- Solid-state devices store data using **electrical charges in memory cells**.

3 **Data Storage**

- The converted data is stored in specific **locations or sectors** inside the storage device.

4 **Data Retrieval**

- When the user wants to open the file, the computer sends a request to the storage device.
- The device locates the stored data and sends it back to the computer.

5 **Data Processing**

- The CPU receives the data from the storage device and processes it for the user.

Example

When you save a document:

1. The computer sends the document to the storage device.

2. The device stores it in a specific memory location.

3. When you open the document again, the storage device retrieves the file and sends it to the CPU.

20 What is SATA?

SATA stands for **Serial Advanced Technology Attachment**. It is a **computer interface** used to connect **storage devices** like hard drives (HDDs), solid-state drives (SSDs), and optical drives to the motherboard.

SATA is the **cable and interface standard** that allows your computer to communicate with storage devices.

SATA replaced the older **PATA (Parallel ATA)** interface because it is **faster, thinner, and more reliable**.

Features of SATA

1. **Faster Data Transfer** – Up to 6 Gbps (SATA III).

2. **Thin Cables** – Uses slim, flexible cables that improve airflow inside the computer.

3. **Supports Modern Storage Devices** – SSDs, HDDs, and optical drives.

SATA Connector Types

1. **Data Connector:** Thin cable connecting the drive to the motherboard.

2. **Power Connector:** Connects the drive to the power supply (PSU).

SATA Versions

SATA 1: 1.5 Gbps: Older devices

SATA 2: 3 Gbps: Improved speed

SATA 3: 1.5 Gbps: Current standard for modern drives

Example

- A desktop computer HDD uses a **SATA data cable** to send and receive data from the motherboard.

- The **power cable** from the SMPS provides electricity to the drive.

SATA cable

21 Describe the working of SATA.

Working of SATA (Serial Advanced Technology Attachment)

SATA is an interface that allows the computer to **transfer data to and from storage devices** like HDDs, SSDs, and optical

drives. Its working can be understood in a step-by-step process:

1 Data Transfer from CPU to Storage

- When the CPU needs to **read or write data**, it sends a request to the **storage device** through the **SATA interface**.

- The SATA controller on the motherboard manages this communication.

2 Serial Communication

- SATA transfers data **serially**, meaning **one bit at a time** per channel.

- Serial transfer allows **higher speeds and fewer cables** compared to older PATA interfaces.

3 Encoding and Signaling

- Data is **encoded into electrical signals** by the SATA controller.

- The signals travel through the **SATA data cable** to the storage device.
-

4 Storage Device Operation

- The storage device (HDD/SSD) receives the signals.

- It **reads or writes data** to the appropriate memory location.

- The drive sends a **confirmation or requested data back** through the same SATA cable.

5 Data Received by CPU

- The CPU receives the data from the SATA device via the **motherboard's SATA controller**.

- The operating system processes the data as needed.

6 Continuous Communication

- SATA allows **full-duplex communication** for modern devices, meaning **sending and receiving can happen simultaneously**.

- Supports **hot-swapping**, allowing drives to be connected or removed without shutting down the system (if supported by the OS and hardware).

Example

- When you open a video file on your PC:

    1. CPU requests data from SSD through SATA.
    2. SSD sends video data through the SATA cable.
    3. Data reaches RAM and is processed for playback
- **SATA replaced PATA** for faster, simpler, and more reliable data transfer.

- **SATA III** can transfer up to **6 Gbps**.

- Works with HDDs, SSDs, and optical drives.

- Uses **thin cables**, improving airflow inside the PC.

22 What is I/O ports?

I/O ports are the **connection points** where you plug in devices like a keyboard, mouse, printer, or USB drive so the computer can **send and receive data**.

Functions of I/O Ports

1. **Input:** Receives data from external devices (e.g., keyboard, mouse).

2. **Output:** Sends data to external devices (e.g., monitor, printer).

3. **Communication:** Allows the CPU to communicate with peripheral devices.

Types of I/O Ports

1. **USB Port** – For connecting flash drives, printers, keyboards, etc.

2. **HDMI / VGA / DisplayPort** – For connecting monitors and displays.

3. **Ethernet Port (RJ-45)** – For network connection.

4. **Audio Ports (3.5mm jack)** – For headphones, microphones, and speakers.

5. **Serial Port (COM)** – Older devices like modems and some industrial equipment.

6. **Parallel Port (LPT)** – Older printers and scanners.

Example

- When you plug a **USB drive** into a USB port:
    - The port sends **data from the USB drive** to the computer.
    - It also allows the computer to **send commands** to the drive, like read or write.

23 List out the I/O ports available Do a practical to identify the I/O ports

1 List of Common I/O Ports

I/O Port	Symbol / Connector	Function	Common Devices
USB (Universal Serial Bus)	Rectangular Type-A / Type-C	Connects storage devices, keyboard, mouse, printer	Flash drives, external HDD, mouse, keyboard
HDMI (High-Definition Multimedia Interface)	Flat, wide port	Sends video and audio to monitors or TVs	Monitors, TVs, projectors
VGA (Video Graphics Array)	15-pin D-sub	Sends analog video to monitors	Older monitors, projectors

DisplayPort	Rectangular with one corner cut	Digital video/audio	Modern monitors, GPUs
Ethernet (RJ-45)	Wide, looks like phone jack	Network connectivity	Routers, LAN cables
3.5mm Audio Jack	Circular port	Audio input/output	Speakers, headphones, microphones
Serial Port (COM)	9-pin D-sub	Connects older devices	Modems, industrial equipment
Parallel Port (LPT)	25-pin D-sub	Connects older printers	Printers, scanners
PS/2 Port	Round, 6-pin	Connects old keyboards/mice	Keyboard, mouse
Thunderbolt / USB-C	Small oval	Data, video, and power transfer	External storage, monitors, docking stations

2 Practical: Identify I/O Ports on a Computer

To locate and identify different **I/O ports** on a computer system.

Materials Required

- Desktop or laptop computer
- Monitor, keyboard, mouse, USB devices (optional)

Step-by-Step Procedure

Step 1: Turn Off the Computer

- Shut down the system before inspecting ports for safety.

Step 2: Locate I/O Ports

- **Desktop:** Look at the **back panel of the motherboard**.
- **Laptop:** Check the **sides of the laptop**.

Step 3: Identify Ports

1. Match each physical port with the **list of common I/O ports**:
    - USB (Type-A / Type-C)
    - HDMI, VGA, DisplayPort
    - Ethernet (RJ-45)
    - Audio jacks (headphones, microphone)

    - Serial / Parallel ports (older computers)
    - PS/2 ports (keyboard/mouse)
2. **Optional Test:**
    - Plug a compatible device (USB, headphones, monitor) into each port to confirm its function.

Step 4: Record Observations

- Make a **table** of all identified ports with their location and connected device (if tested).

Result

You will be able to **identify all the common I/O ports** on your computer and understand their function.

24 What is Boot Process?

The **boot process** is the sequence of steps a computer follows when it is **powered on to start the operating system (OS)** Booting is like **waking up the computer**, checking its components, and getting it ready to use.

Stages of Boot Process

1 Power-On

- When the computer is turned on, the **power supply sends electricity** to the motherboard and all components.

2 POST (Power-On Self-Test)

- BIOS/UEFI runs **POST** to check essential hardware:

    - CPU
    - RAM
    - Keyboard and input devices
    - Storage drives
- If any hardware fails, the system **beeps or shows an error message**.

3 BIOS/UEFI Initialization

- BIOS/UEFI reads the **CMOS settings** (date, time, boot order).
- Initializes hardware and prepares the system for loading the OS.

4 Bootstrap Loader

- BIOS/UEFI searches for the **bootable device** (HDD, SSD, USB, CD/DVD).
- Loads the **first instructions of the operating system** into RAM.

5 OS Loading

- The operating system kernel is loaded into memory.
- Essential system files and drivers are initialized.

6 User Interface Load

- Graphical user interface (GUI) or command line interface (CLI) is loaded.

- The system is now **ready for the user** to interact with applications and files.

Flow

Power On → POST → BIOS/UEFI Initialization → Bootstrap Loader → OS Loading → User Interface

- Boot process is **essential for starting the computer**.

- **BIOS/UEFI** and **CMOS settings** control hardware checks and boot order.

- If booting fails, the computer may show **error messages** or fail to start.

Example:
When you press the power button:

1. Fans spin and motherboard lights turn on.
2. POST checks RAM and CPU.
3. BIOS finds the OS on the SSD.
4. Windows or Linux loads, and you see the desktop screen.

25 Describe the boot process in Linux?

The **Linux boot process** is the sequence of steps that a computer follows to **start a Linux operating system** after being powered on. It is slightly different from Windows but follows a structured flow.
Linux booting is how the computer **starts, checks hardware, and loads the Linux OS** into memory for use.

Stages of Linux Boot Process

1 BIOS/UEFI Initialization

- When the system is powered on, **BIOS or UEFI** checks essential hardware (CPU, RAM, keyboard).
- It reads the **CMOS settings** and determines the **boot device order**.
- Hands over control to the **bootloader** located on the storage device.

2 Bootloader Stage

- Linux uses bootloaders such as **GRUB (GRand Unified Bootloader)**.
- The bootloader:
  - Loads the **Linux kernel** into memory.
  - Provides a **menu to select different Linux versions** or recovery mode.
  - Passes necessary **kernel parameters** to start the OS.

3 Kernel Initialization

- The **Linux kernel** is loaded into memory and starts execution.

- Kernel initializes **CPU, memory, and core system services**.
- Detects hardware and loads **drivers** required for devices.

4 Init/Systemd Process

- After kernel initialization, control is passed to **init** or **systemd** (in modern Linux distributions).
- **systemd** is the **first process (PID 1)** and manages:
    - Starting background services (daemons)
    - Mounting file systems
    - Setting up network and user environments

5 Runlevel/Target Execution

- Linux starts different **runlevels or targets** depending on the system configuration:
    - **Graphical mode** – boots into GUI desktop
    - **Multi-user mode** – boots into CLI for multiple users
    - **Rescue mode** – minimal system for troubleshooting

6 User Login

- Login prompt or graphical display manager (GDM, LightDM) appears.

- User can **log in** and start using the system.

Flow

Power On → BIOS/UEFI → Bootloader (GRUB) → Linux Kernel → Init/Systemd → Runlevel/Target → User Login

- Linux booting is **modular**, allowing custom kernels and services.
- **GRUB** is the most common bootloader in Linux systems.
- **systemd** manages all services and ensures a smooth startup.
- Each step ensures **hardware is ready** and **OS services are initialized** before user interaction.

Example:
When you turn on a Linux computer:

1. BIOS checks RAM and CPU.
2. GRUB menu appears, allowing selection of kernel.
3. Kernel loads and initializes devices.
4. systemd starts services, mounts drives, and launches login screen.

I can also create a **diagram showing the Linux boot process with GRUB, kernel, and systemd stages**, which mak

26 What is printer? And type of printer.

A **printer** is an **output device** that converts **digital data from a computer into a physical form on paper**.
A printer **prints text, images, or graphics** from your computer onto paper or other printable media.

Types of Printers

Printers are classified based on **technology and purpose**:

1 Impact Printers

- Work by **physically striking an inked ribbon onto paper**.
- Produce dots to form characters or images.
- **Examples:**
  - **Dot Matrix Printer** – uses pins to strike the ribbon.
  - **Line Printer** – prints a whole line at once (used in old systems).
- **Features:**
  - Noisy
  - Can print on **multi-part forms** (carbon copies)

2 Non-Impact Printers

- Do **not physically strike the paper**.
- Produce **high-quality print silently**.

Common Types:

a) Inkjet Printer

- Sprays **tiny droplets of liquid ink** onto paper.
- **Features:**
  - High-quality color printing
  - Good for photos and documents
  - Slower for large volumes

b) Laser Printer

- Uses **laser beams to form an image on a drum**, then transfers toner to paper.
- **Features:**
  - Fast and efficient for large volumes
  - Sharp text printing
  - Black & white or color options

c) Thermal Printer

- Uses **heat to produce images on special thermal paper**.

- **Features:**
    - Quiet and fast
    - Common in receipts, tickets, and barcode labels

3 3D Printer

- Creates **physical objects layer by layer** from digital 3D models.
- **Features:**
    - Uses plastic, metal, or other materials
    - Used in prototyping, manufacturing, and education

27What are the parts of laptop?

A **laptop** is a portable computer that combines most of the components of a desktop into a single compact device.
A laptop has **hardware components built-in** that allow it to function without requiring separate parts like a monitor or keyboard.

Main Parts of a Laptop

1 Display Screen

- Shows the **visual output** from the laptop.
- Types: LCD, LED, OLED.
- Usually integrated into the top half of the laptop.

2 Keyboard

- Built-in **input device** for typing.
- May include **touchpad buttons** or function keys.

3 Touchpad / Trackpad

- Acts as a **mouse replacement**.
- Supports gestures like scrolling and zooming.

4 CPU (Central Processing Unit)

- The **brain of the laptop** that processes data and instructions.
- Usually **soldered onto the motherboard** in modern laptops.

5 RAM (Memory)

- Temporary storage for **running programs**.
- Allows multitasking.
- Some laptops allow **RAM upgrades**; others are soldered.

6 Storage (HDD/SSD)

- Stores **OS, applications, and files** permanently.
- SSDs are common in modern laptops for **faster performance**.

7 Motherboard

- Main circuit board connecting **CPU, RAM, storage, and other components**.
- Contains **chipsets, ports, and connectors**.

8 Battery

- Provides **portable power** to the laptop.
- Rechargeable Lithium-ion batteries are most common.

9 Ports and Connectors

- USB, HDMI, Ethernet, audio jack, SD card slot.
- Allow connection to **external devices and networks**.

10 Wireless Components

- **Wi-Fi card** for internet connectivity.
- **Bluetooth module** for connecting peripherals.

11 Cooling System

- Small **fans or heat pipes** to prevent overheating.

12 Webcam and Microphone

- Integrated for **video calls and recording audio/video**.

13 Speakers

- Built-in for **audio output**.

14 Optical Drive (Optional)

- Some laptops have **CD/DVD drives** (mostly in older models).